# K60XV MANUAL ERRATA

Rev. **B-1,** July 9, 2012

**PLEASE MAKE THE FOLLOWING CHANGES TO THE MANUAL BEFORE PROCEDING TO ENSURE THAT THE K60XV FUNCTIONS CORRECTLY**

1. **Page 3, Parts Inventory, Ref D1-D2:** Change the description to read "Diode 1N4148". Change the part number to "E560002".
2. **Page 4, add the following step after the second checkbox step:**
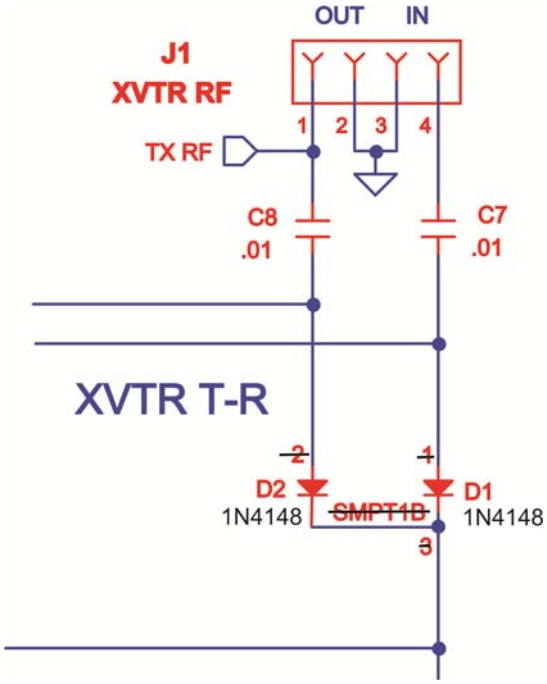
   ☐ Install diodes D1 and D2 (1N4148). Orient the banded end (cathode) of each diode as indicated by its component outline.
3. **Page 6:** Delete the second and third checkbox steps (the SMT1B board is no longer used).
4. **Page 20:** On the schematic diagram, update the upper right corner with the changes shown below around D1 and D1: